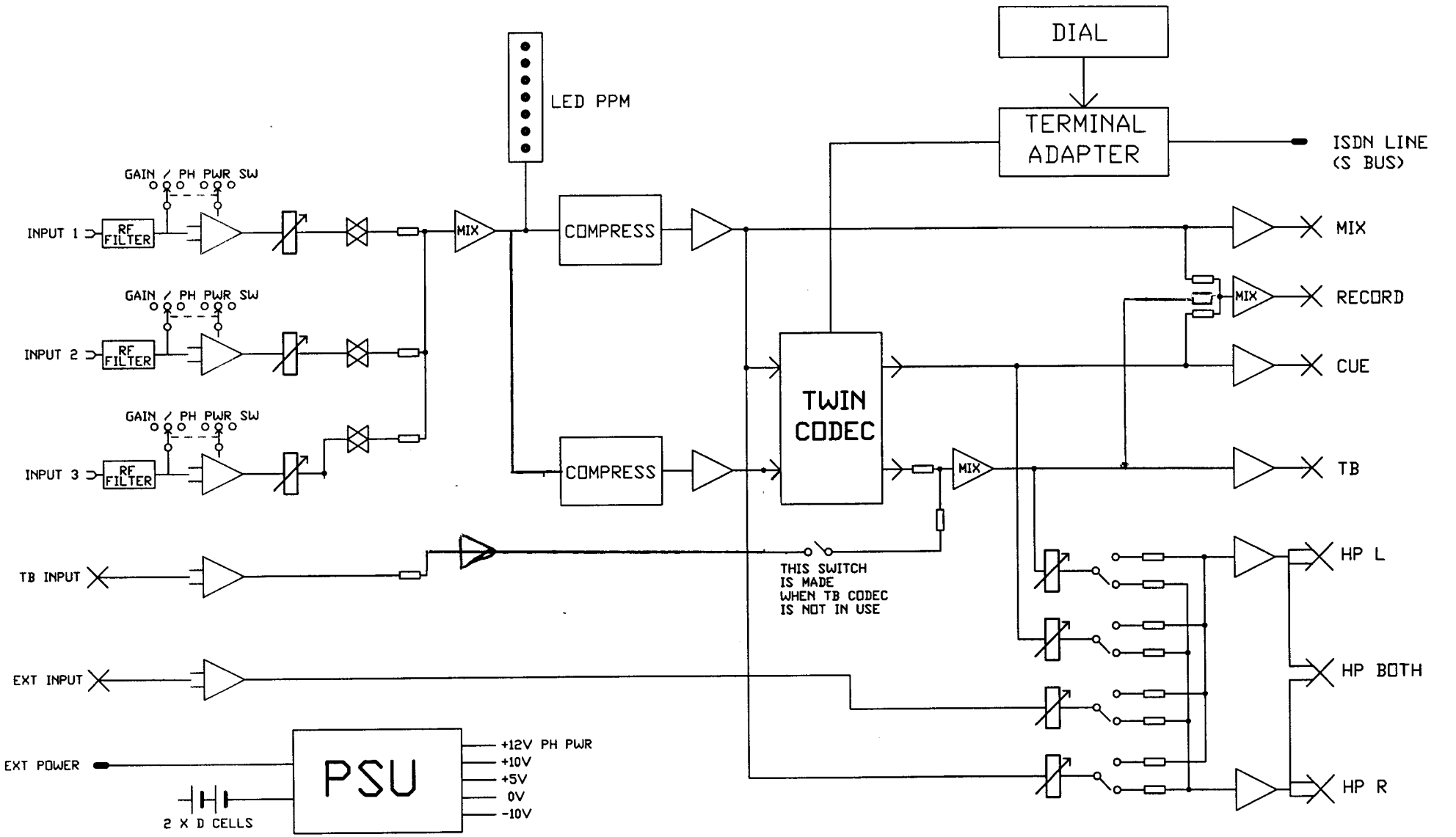

		ISSUE	DATE	DRAWING NUMBER
GLENSOUND ELECTRONICS LTD © 2000	GSGC25J BLOCK DIAGRAM	1	09/10/00	A4-14320A
		2	10/10/00	
				ORIGINALLY DRAWN USING AUTOTRAX