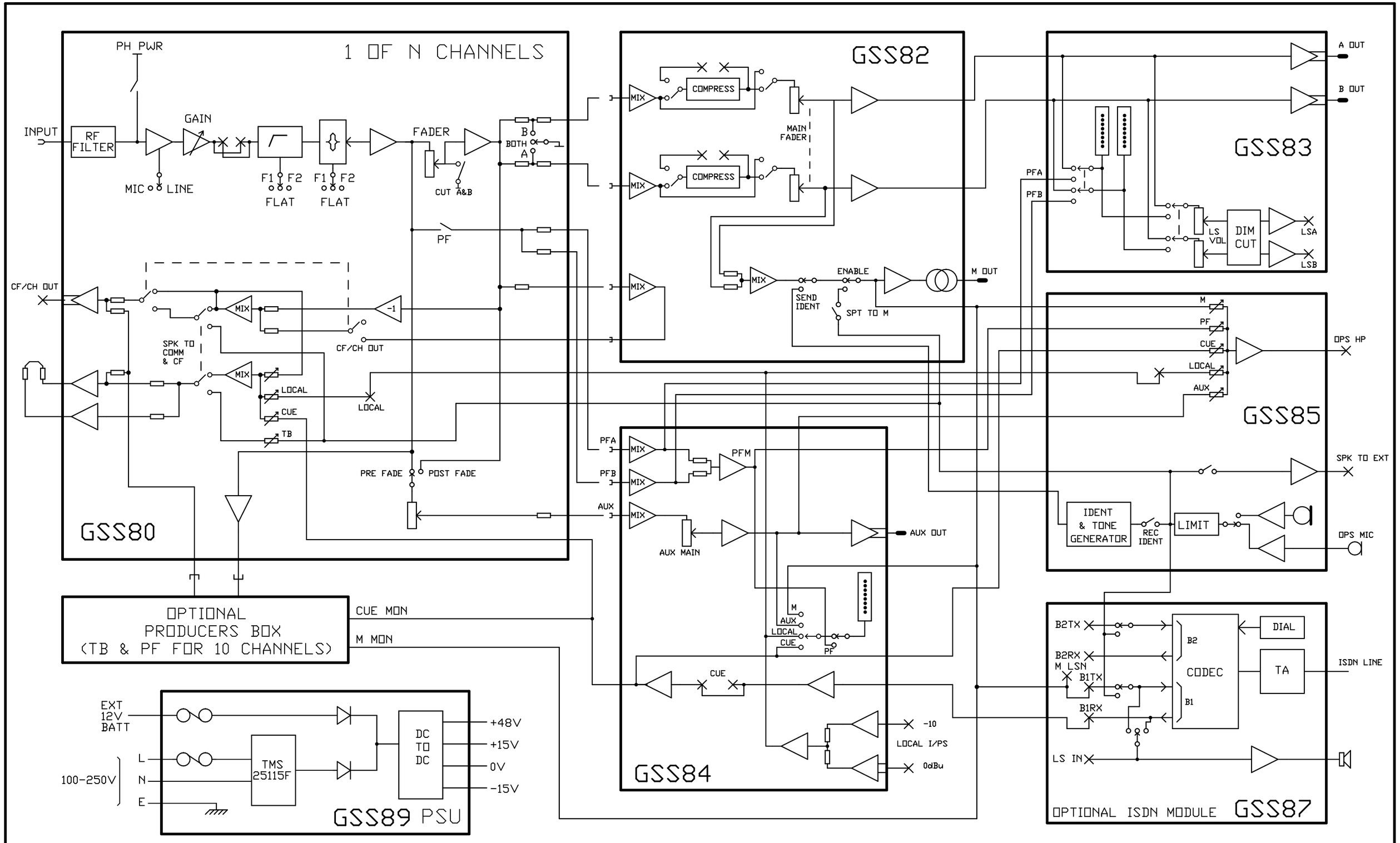

©2011

GLENSOUND ELECTRONICS LTD

GSGX3 MIXER BLOCK DIAGRAM

ISSUE	DATE
1	20/05/05
5	24/11/05
6	06/03/08
7	09/03/11

DRAWING NUMBER: A3-15404

DRAWN BY:

ORIGINALLY DRAWN USING AUTOTRAX