GLENSOUND
ELECTRONICS LTD

GALAXY 1:14
TALKBACK
SYSTEM

PRODUCT DETAILS

6 BROOKS PLACE, MAIDSTONE, KENT, ME14 1HE. ENGLAND.
Visit our Website at www.glensound.co.uk

TEL: +44 (0) 1622 753662
FAX: +44 (0) 1622 762330

GLENSOUND ELECTRONICS LTD

GALAXY 1:14	*TALKBACK SYSTEM*	*HANDBOOK CONTENTS*
DATE 29/01/13	*WP06-443*	*ISSUE No. 1*

	DESCRIPTION	DRAWING No
1.	CE. Warranty & Emissions	
2.	Block Diagram	A2-17180
3.	Panel Views	A2-17158
4.	GSY99 Galaxy BS114 Daughter Card	A3-17274
5.	Bridge TB Panel GSY95	A4-17276
6.	Bridge Switch Panel GSY95	A3-17278
7.	Intercom & Moitoring Panel	A2-17166
8.	GSY89 Galaxy S114+ LS & HP Circuits, Sheet 1	A3-17280
9.	GSY89 Galaxy S114+ LS & HP Circuits, Sheet 2	A3-17282
10.	GSY90 Galaxy S114+ TB Switches	A3-17284
11.	GSY91 Galaxy S114+ Main PCB, Sheet 1	A4-17286
12.	GSY91 Galaxy S114+ Main PCB, Sheet 2	A4-17288
13.	GSY91 Galaxy S114+ Main PCB, Sheet 3	A4-17290
14.	GSY92 Galaxy S114+ LS Select Switches	A4-17292
15.	Galaxy SDT 1:14 Desktop Panel Views	A2-17174
16.	Galaxy SDT 1U TB Subrack	A4-16462
17.	GSW17 & GSW18 Mic Circuits	A3-16452
18.	GSW18 Headphone & LS Circuit Diagram	A3-16456
19.	GSW96 PSU Circuit Diagram	A4-16692

GLENSOUND ELECTRONICS LTD.
6 BROOKS PLACE, MAIDSTONE, KENT, ME14 1HE, ENGLAND

Tel: +44 (0) 1622 753662
Fax: +44 (0) 1622 762330

	DESCRIPTION	DRAWING No
20.	GSY96 Galaxy 114 Interface PCB	A4-17294
21.	Galaxy SDT+ 1:14 Destop Panel Views	A2-17176
22.	Galaxy SDT+ Desktop Talkback Unit	A3-16434
23.	GSW17 HP & LS Circuit Diagram	A2-16454
24.	GSW16 Input Circuit Diagram	A3-16450
25.	General Programming Information for Galaxy 114	J:\Galaxy114
26.	Galaxy 114 Wiring Instructions	A3-17296

GLENSOUND ELECTRONICS LTD.
6 BROOKS PLACE, MAIDSTONE, KENT, ME14 1HE, ENGLAND

Tel: +44 (0) 1622 753662
Fax: +44 (0) 1622 762330

Glensound Electronics Ltd

Thank you for choosing a new Glensound product.

All rights reserved.

Information contained in this manual is subject to change without notice, if in doubt please contact us for the latest product information.

If you need any help with the product then we can be contacted at:

Glensound Electronics Ltd
1 – 6 Brooks Place
Maidstone
Kent
ME14 1HE
United Kingdom

Telephone: +44 (0) 1622 753662
Fax: +44 (0) 1622 762330

EMAIL ADDRESSES
General enquires: office@glensound.co.uk
Technical enquires: techinfo@glensound.co.uk
Sales enquires: sales@glensound.co.uk

PRODUCT WARRANTY:

All equipment is fully tested before dispatch and carefully designed to provide you with trouble free use for many years.

We have a policy of supporting products for as long as possible and guarantee to be able to support your product for a minimum of 10 years.

For a period of one year after the goods have been despatched the Company will guarantee the goods against any defect developing after proper use providing such defects arise solely from faulty materials or workmanship and that the Customer shall return the goods to the Company's works or their local dealer.

All non wear parts are guaranteed for 2 years after despatch and any defect developing after proper use from faulty materials or workmanship will be repaired under this warranty providing the Customer returns the goods to the Company's works or their local dealer.

CE

This equipment manufactured by Glensound Electronics Ltd of Brooks Place Maidstone Kent ME14 1HE is CE marked and conforms to:

Low Voltage Directive:	EN60065
Emissions:	EN55103.1
Immunity:	EN55103.2

WASTE ELECTRICAL AND ELECTRONIC EQUIPMENT REGULATIONS 2006 (WEEE)

Glensound Electronics Ltd is registered for business to business sales of WEEE in the UK our registration number is:

WEE/JJ0074UR

RoHS DIRECTIVE

EC directive 2002/95/EC restricts the use of the hazardous substances listed below in electrical and electronic equipment.

This product conforms to the above directive and for this purposes, the maximum concentration values of the restricted substances by weight in homogenous materials are:

Lead	0.1%
Mercury	0.1%
Hexavalent Chromium	0.1%
Polybrominated Biphenyls	0.1%
Polybrominated Diphenyl Ethers	0.1%
Cadmium	0.01%

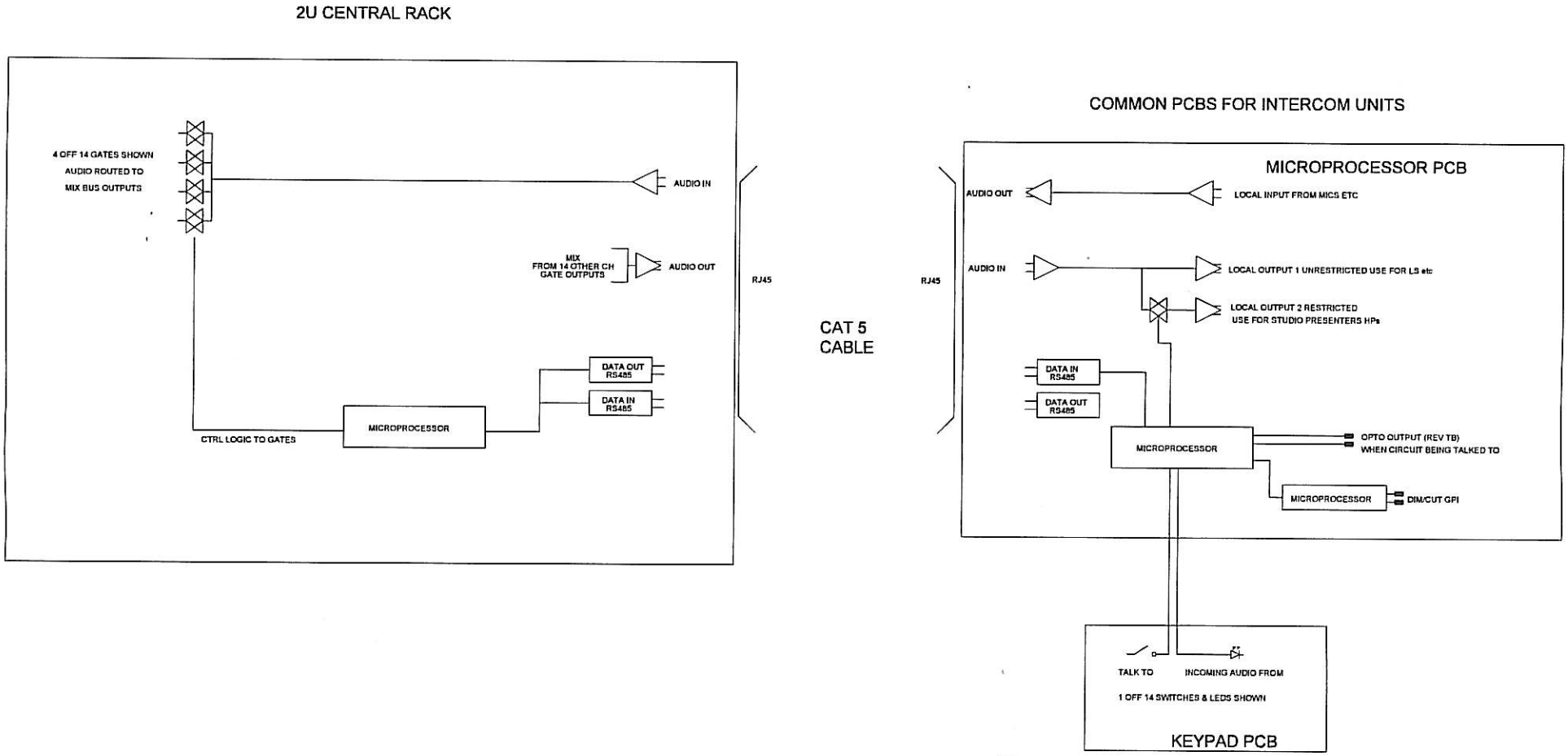

SIMPLE BLOCK DIAGRÁM OF GALAXY 1:14 INTERCOM	ISSUE 2	DATE 28/01/2013	GLENSOUND ELECTRONICS LTD ©2012
	DRAWING NUMBER A2-17180		

REAR VIEW

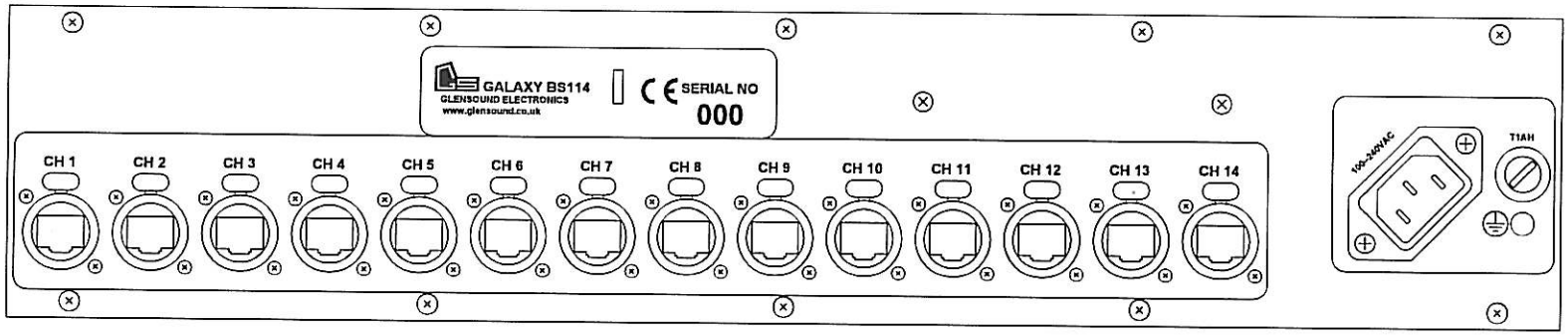

FRONT VIEW

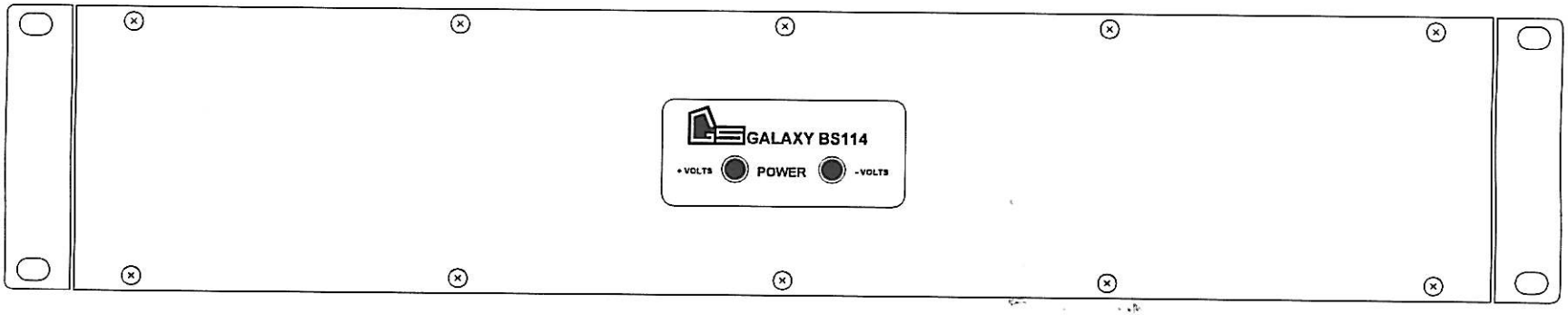

ISSUE	3	SUBJECT	GALAXY BS 1:14 VIEWS
DATE	28/01/13		
DRAWN	GGD	DRG. REF.	A2-17158

(C) Glensound 2013

Glensound Electronics Ltd.
8 Brooks Place, Maidstone, Kent, ME14 1HE.
www.glensound.co.uk Tel: +44 (0) 1622 753682

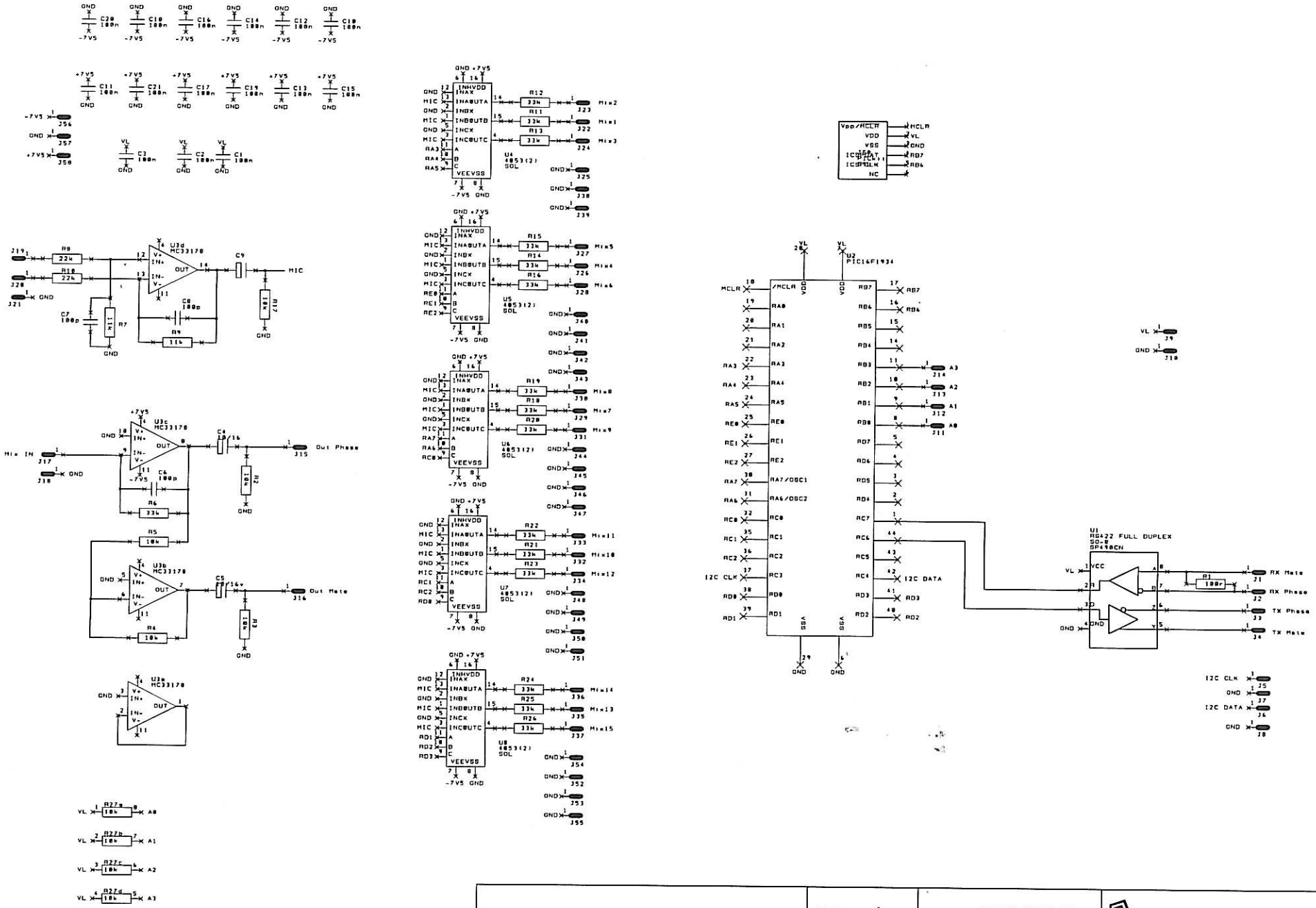

GSY99 GALAXY BS114 DAUGHTER CARD	ISSUE 1	DATE 28/01/2013
	DRAWING NUMBER A3-17274	

GLENSOUND ELECTRONICS LTD

© 2013

DRAWING SHOWS PART OF BRIDGE

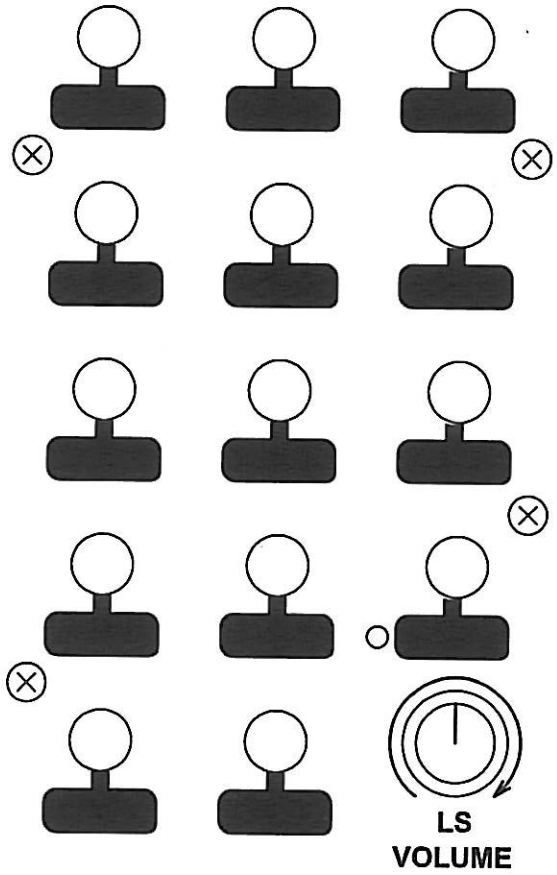

ISSUE	1	(C) Glensound 2013		Glensound Electronics Ltd.
DATE	28/01/2013	SUBJECT	ViLoR GALAXY BRIDGE TB Panel GSY95	6 Brooks Place, Maidstone, Kent. ME14 1HE.
DRAWN		DRG. REF.	A4-17276	www.glensound.co.uk Tel: +44 (0) 1622 753662

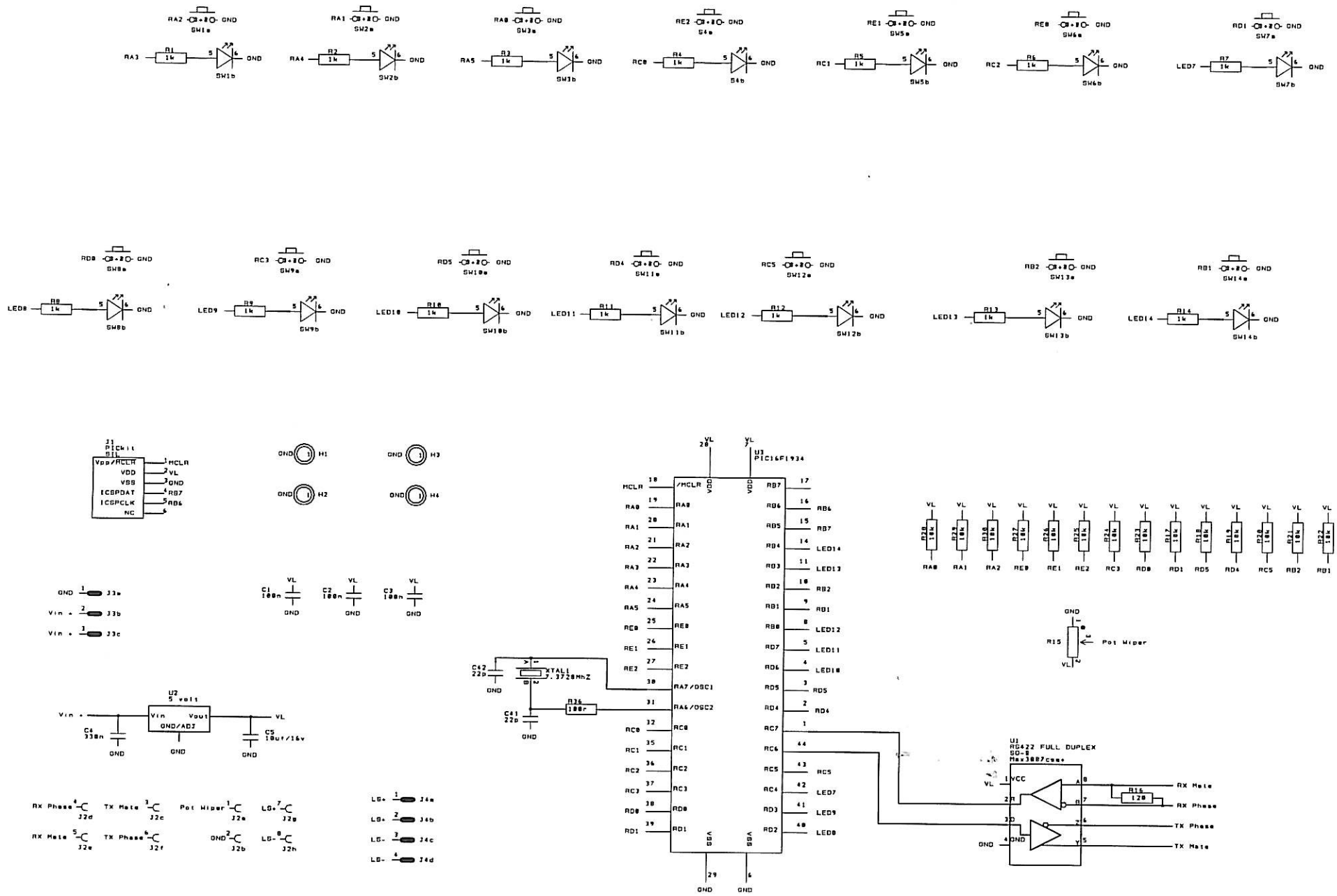

GSY95 Galaxy 114 Bridge Switch Panel	ISSUE 1	DATE 28/01/2013	GLENSOUND ELECTRONICS LTD
	DRAWING NUMBER A3-17278		© 2013

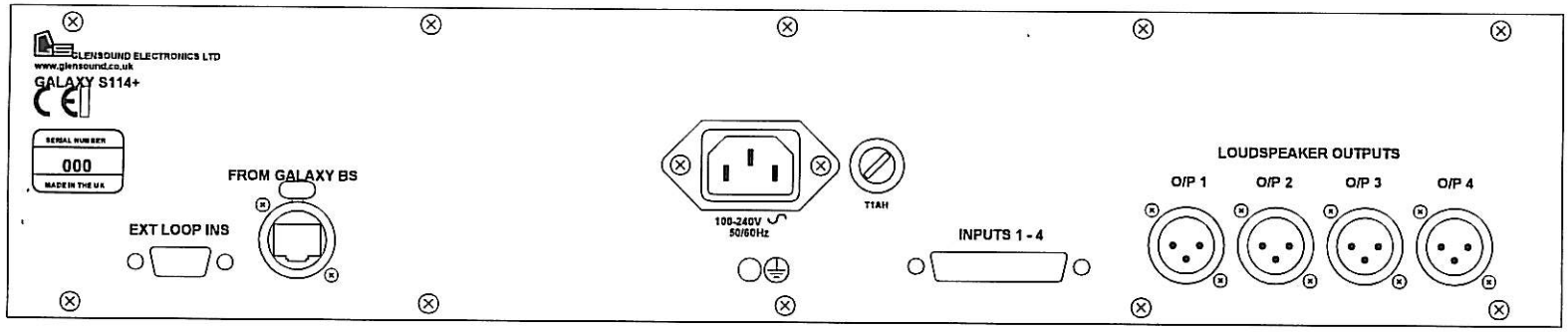

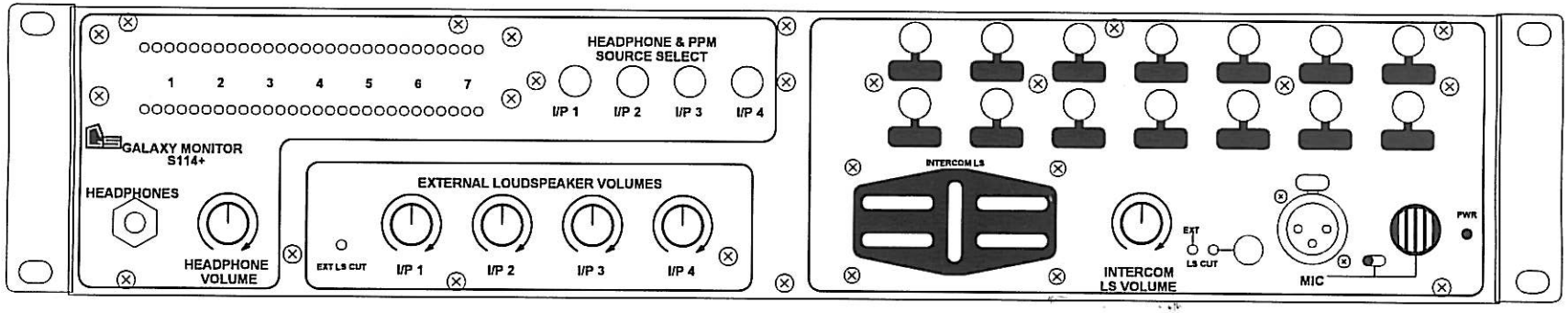

ISSUE	2	SUBJECT	ViLoR MK2 Galaxy 114 Intercom and Monitoring Panel	Glensound Electronics Ltd. 6 Brooks Place, Maidstone, Kent, ME14 1HE. www.glensound.co.uk Tel: +44 (0) 1622 753662
DATE	28/01/2013			
DRAWN	GGD	DRG. REF.	A2-17166	(C) Glensound 2013

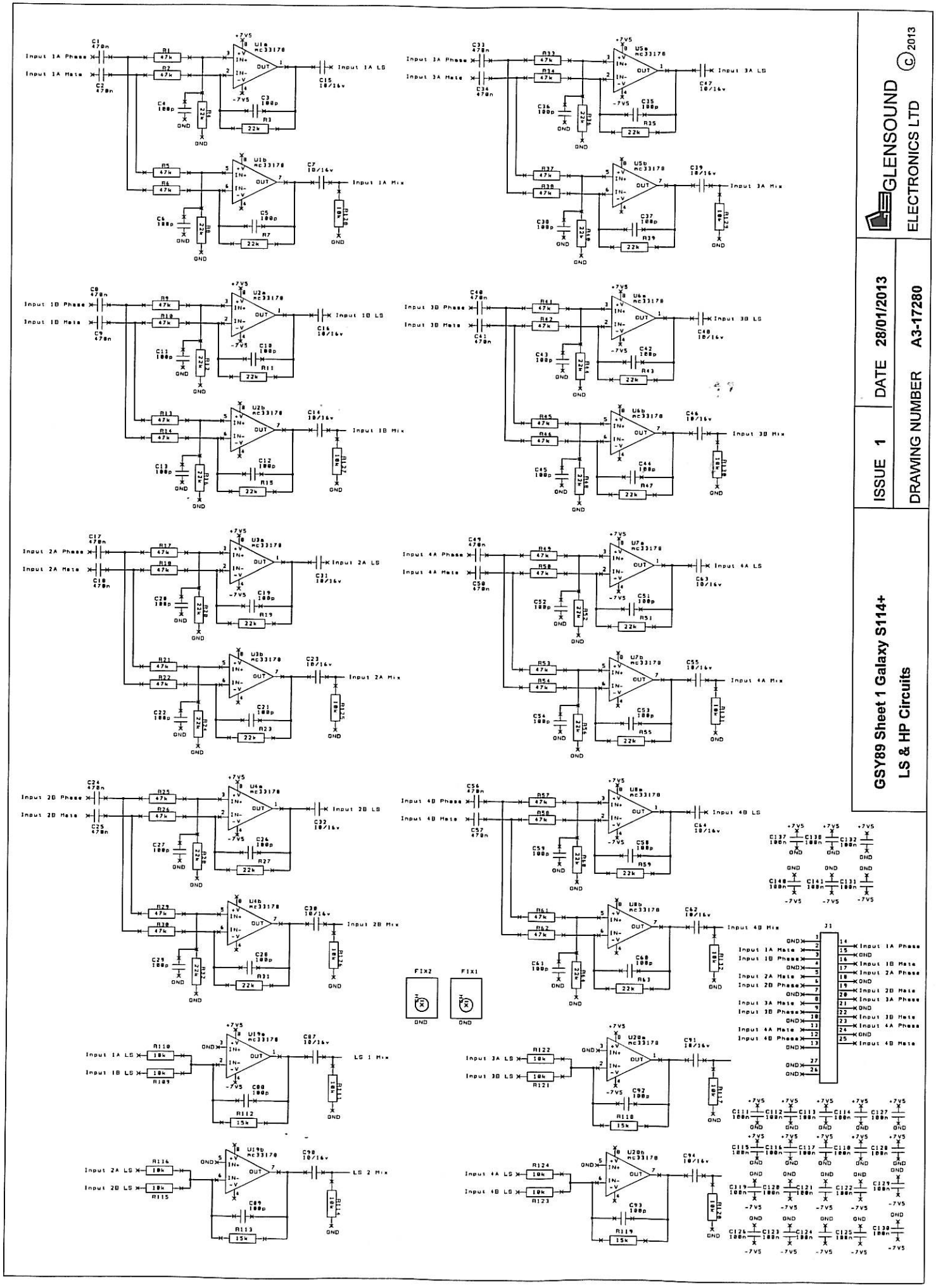
GLENSOUND
ELECTRONICS LTD
© 2013
ISSUE 1
DATE 28/01/2013
DRAWING NUMBER A3-17280
GSY89 Sheet 1 Galaxy S114+
LS & HP Circuits
Input 1A Phase
Input 1A Mate
Input 1A LS
Input 1A Mix
Input 1B Phase
Input 1B Mate
Input 1B LS
Input 1B Mix
Input 2A Phase
Input 2A Mate
Input 2A LS
Input 2A Mix
Input 2B Phase
Input 2B Mate
Input 2B LS
Input 2B Mix
Input 3A Phase
Input 3A Mate
Input 3A LS
Input 3A Mix
Input 3B Phase
Input 3B Mate
Input 3B LS
Input 3B Mix
Input 4A Phase
Input 4A Mate
Input 4A LS
Input 4A Mix
Input 4B Phase
Input 4B Mate
Input 4B LS
Input 4B Mix
LS 1 Mix
LS 2 Mix
FIX2
FIX1
J1
+7V5
-7V5
GND

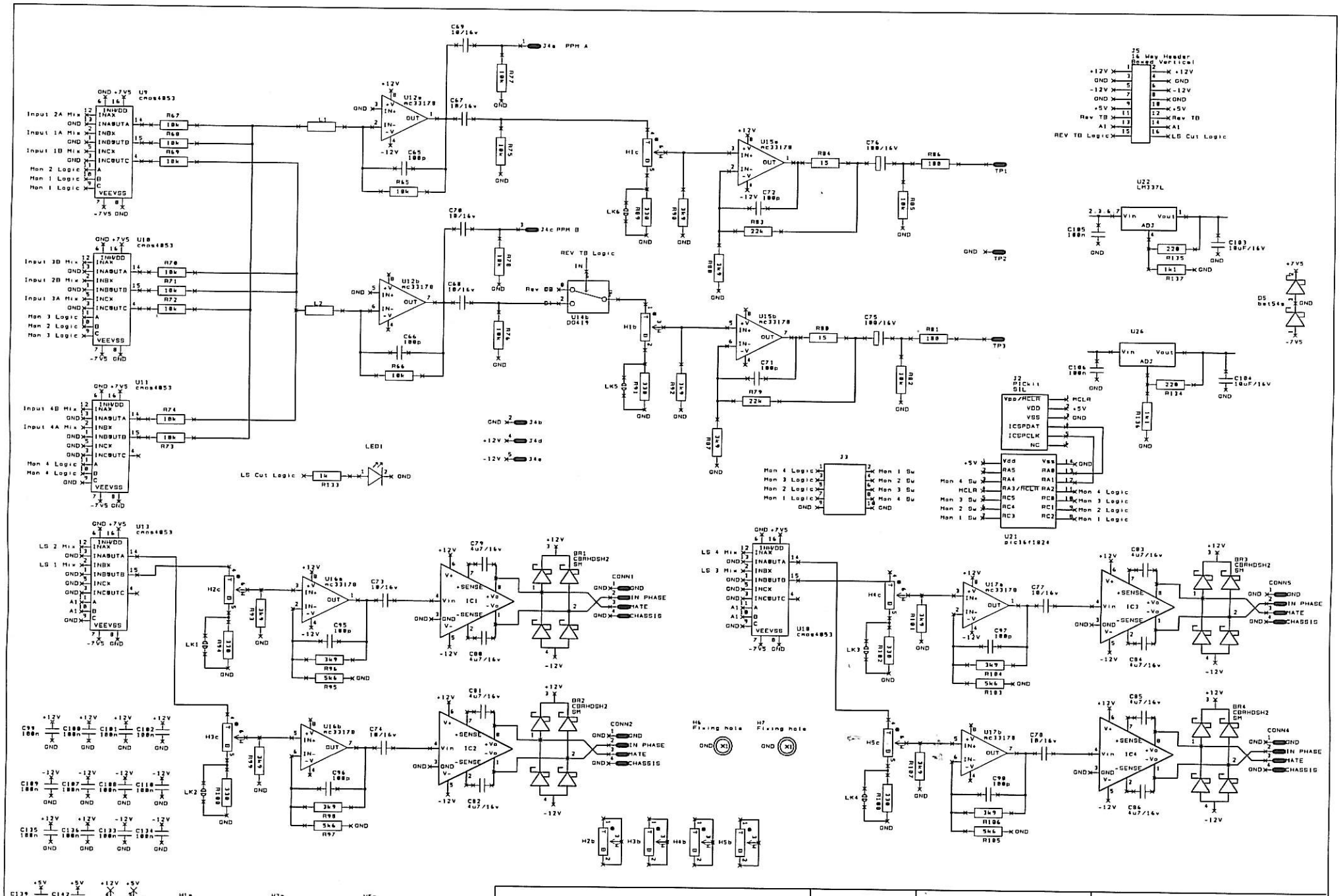

GSY89 Sheet 2 Galaxy S114+ **LS & HP Circuits**	ISSUE **1**	DATE **28/01/2013**
	DRAWING NUMBER **A3-17282**	GLENSOUND ELECTRONICS LTD

© 2013

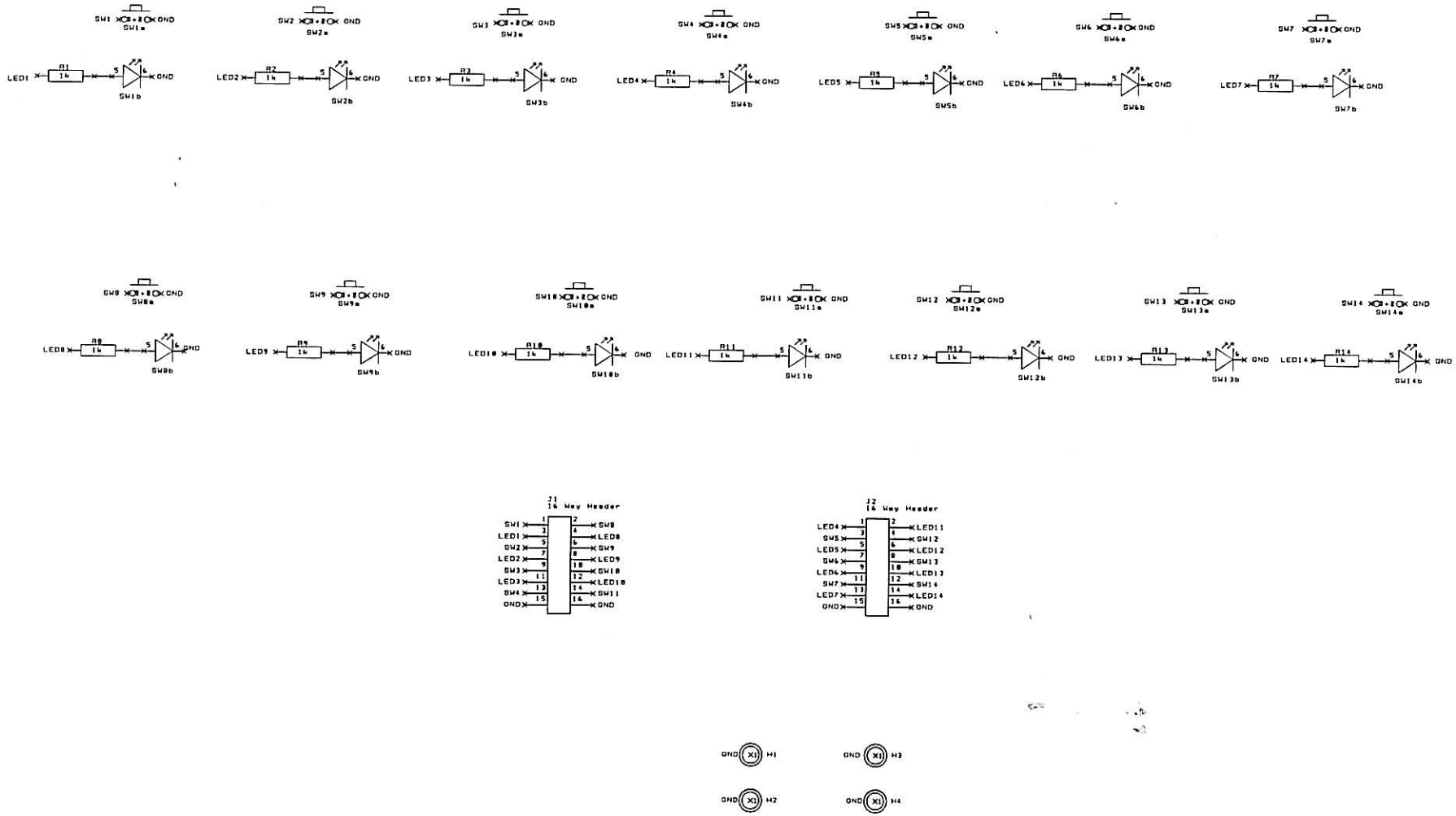

GSY90 Galaxy S114+	ISSUE **1**	DATE **28/01/2013**	GLENSOUND
TB Switches	DRAWING NUMBER **A3-17284**		ELECTRONICS LTD

© 2013

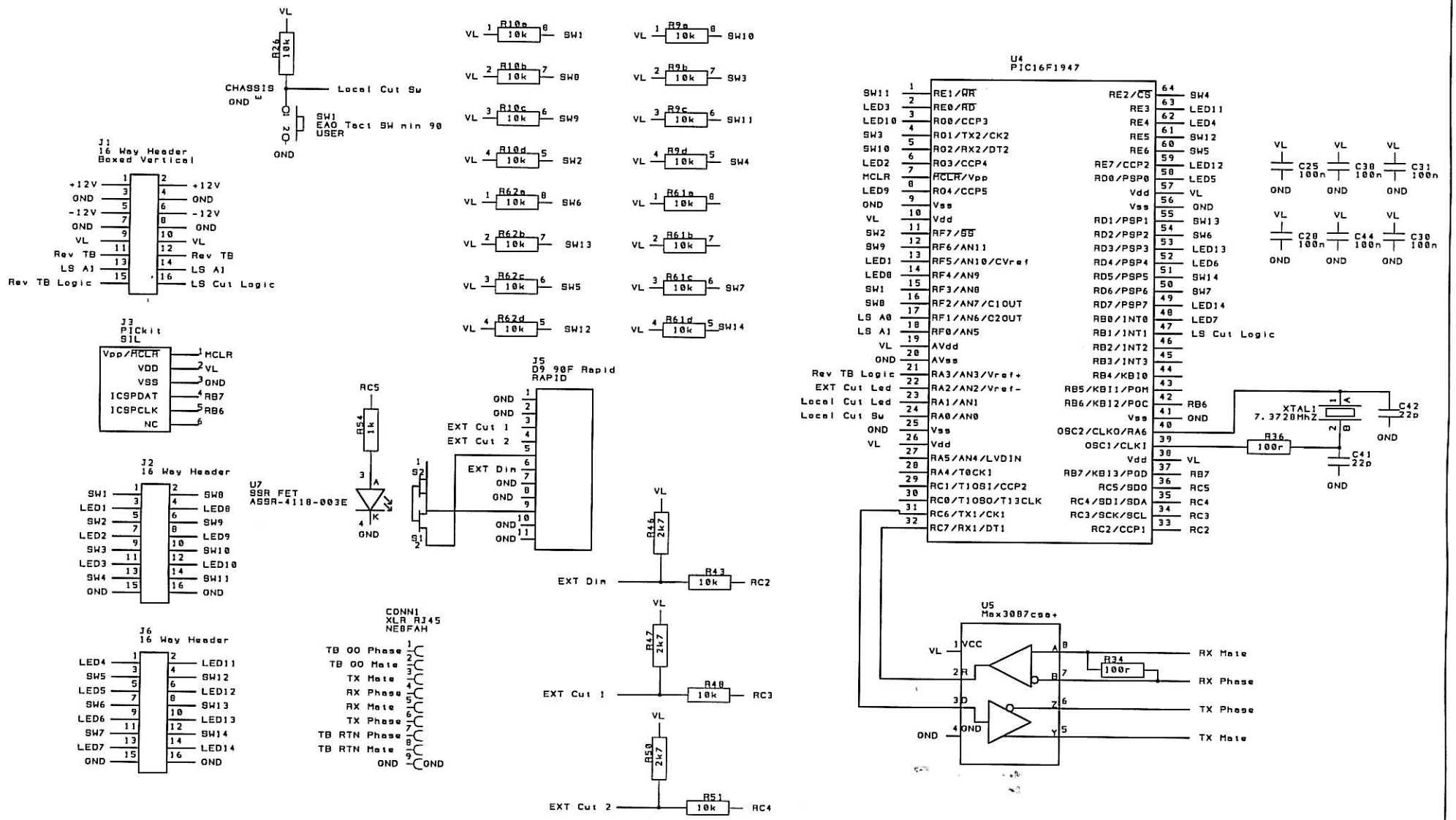

GSY91 Sheet 1 Galaxy ViLoR S114+

Main PCB

ISSUE **1**	DATE **28/01/2013**	GLENSOUND ELECTRONICS LTD
DRAWING NUMBER **A4-17286**		© 2013

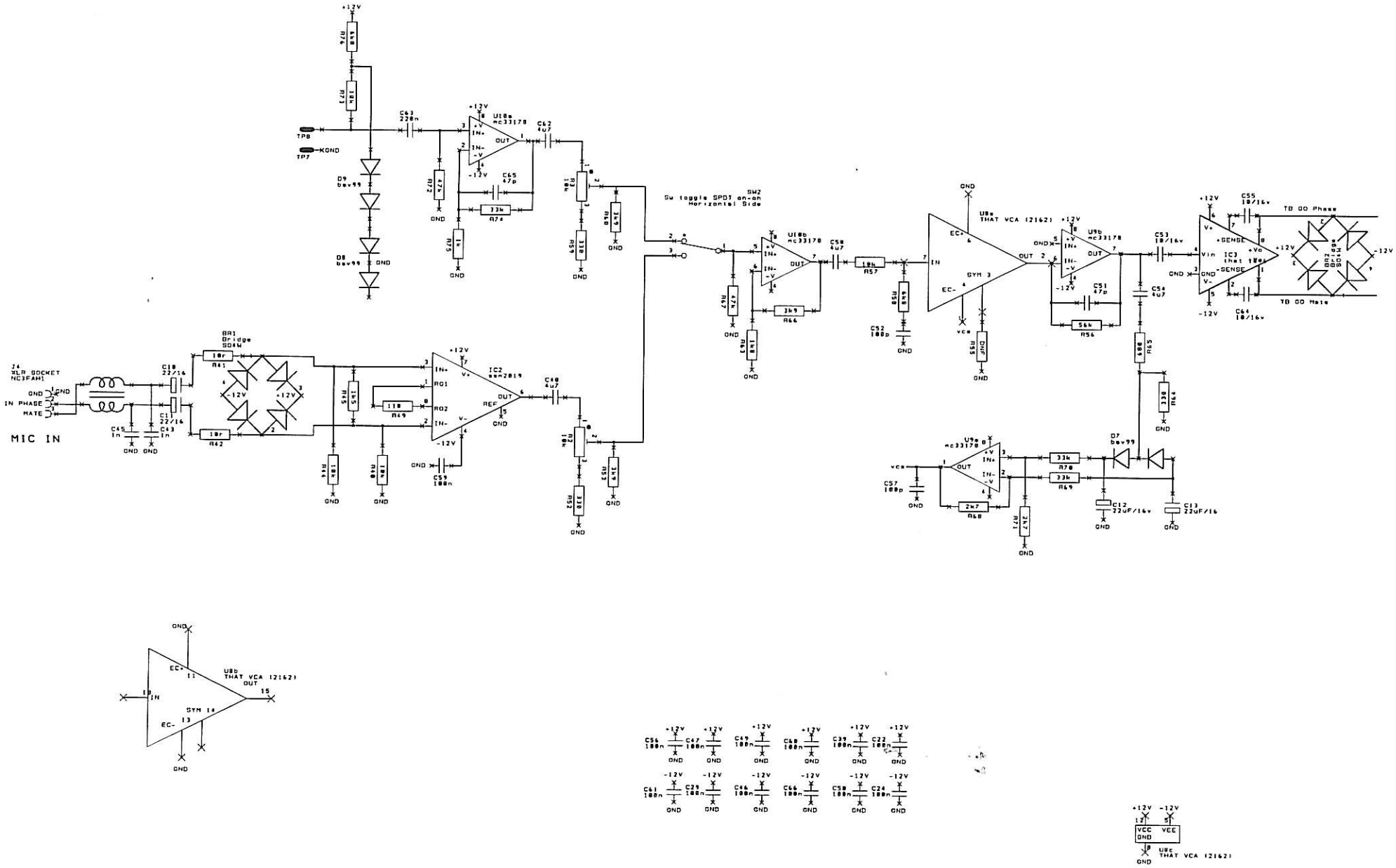

GSY91 Sheet 2 Galaxy ViLoR S114+ Main PCB	ISSUE **1**	DATE **28/01/2013**	GLENSOUND ELECTRONICS LTD
	DRAWING NUMBER	**A4-17288**	© 2013

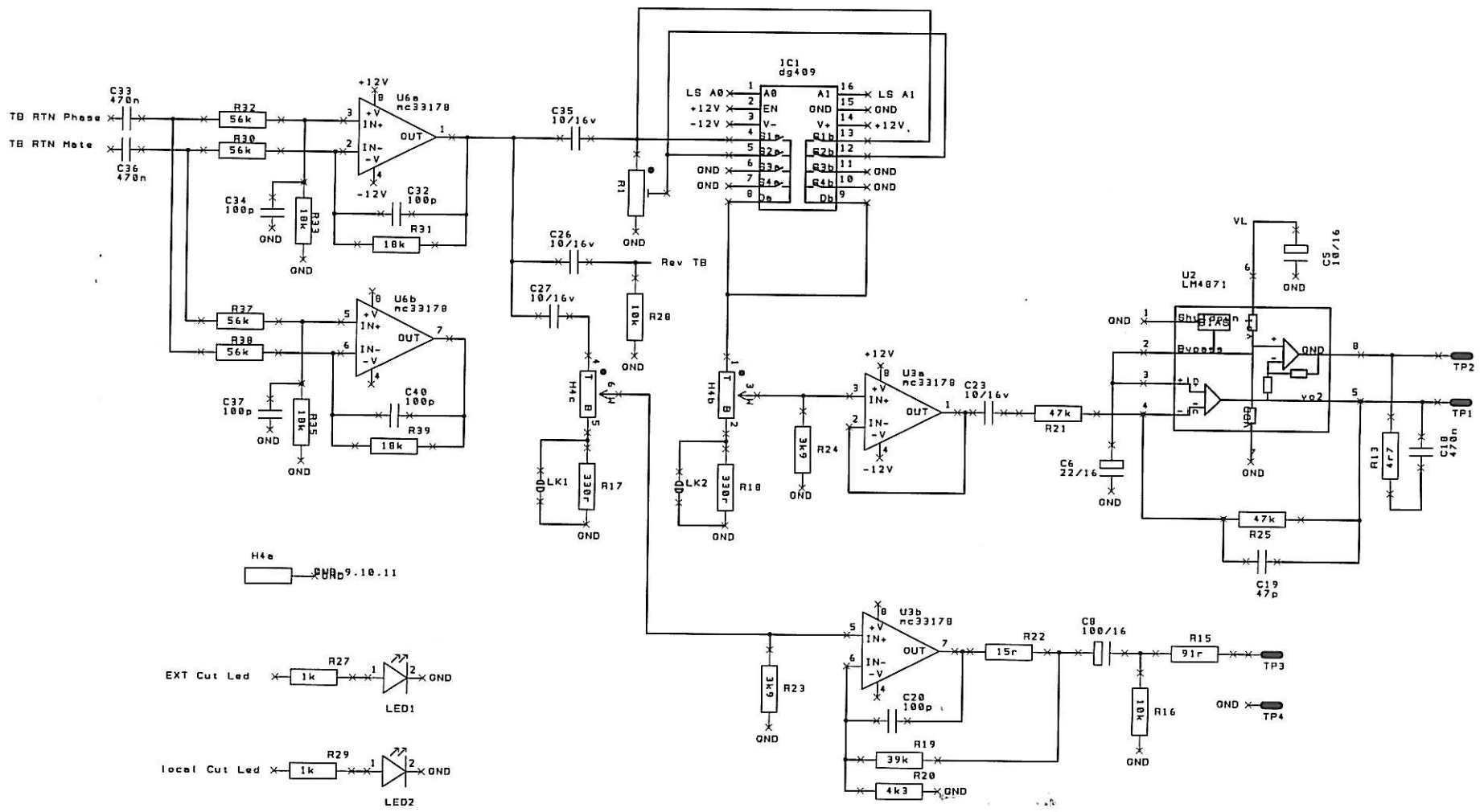

GSY91 Sheet 3 Galaxy ViLoR S114+
Main PCB

ISSUE 1	DATE 28/01/2013
DRAWING NUMBER A4-17290	

GLENSOUND ELECTRONICS LTD

© 2013

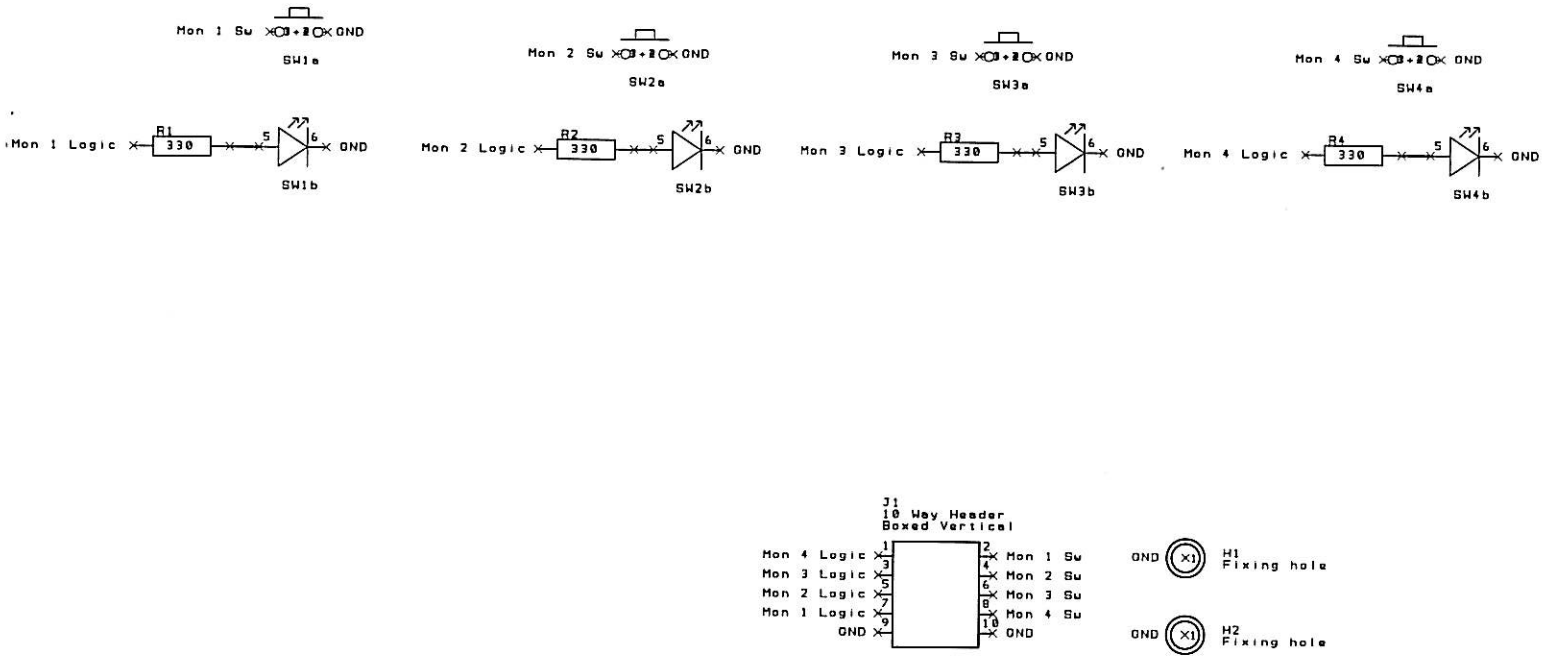

GSY92 Galaxy ViLoR S114+

LS Select Switches

ISSUE **1**	DATE **28/01/2013**	GLENSOUND ELECTRONICS LTD	© 2013
DRAWING NUMBER **A4-17292**			

A1
Border A4 horizontal

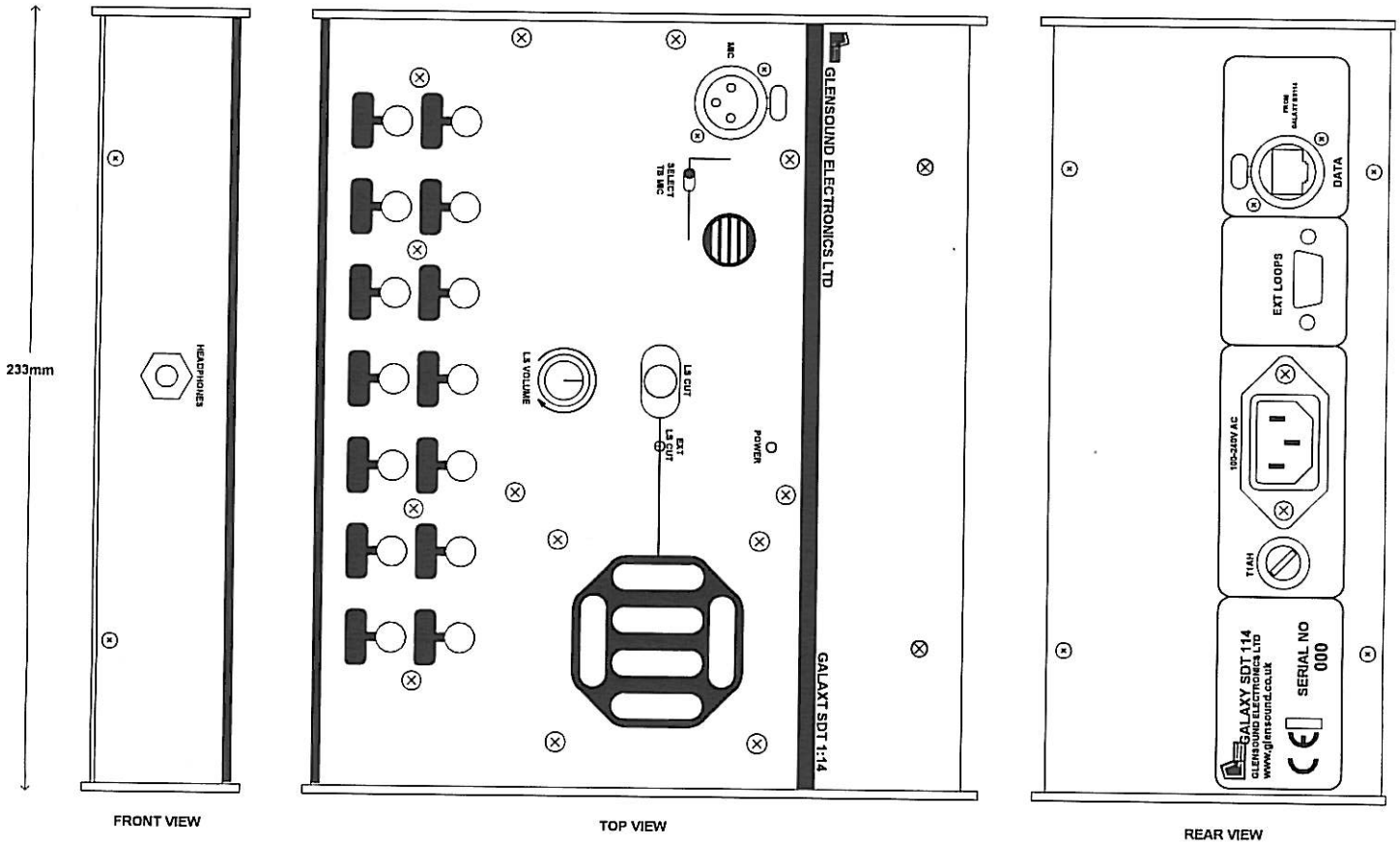

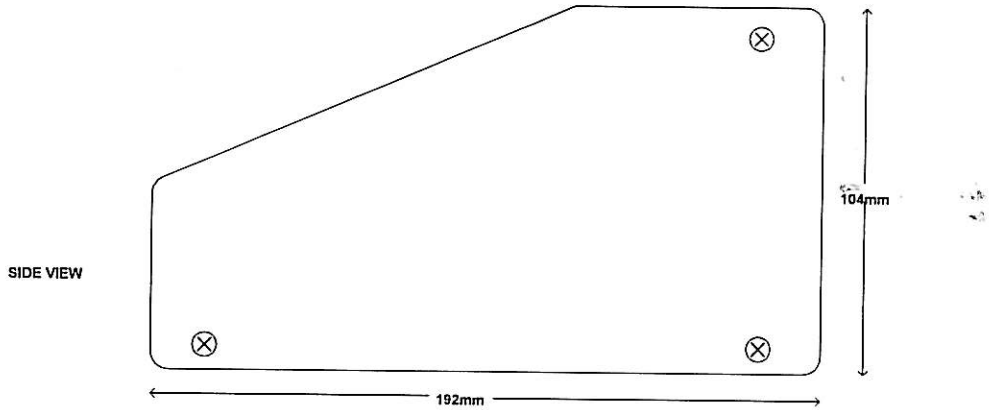

ISSUE	2	SUBJECT GALAXY SDT1:14 DESKTOP PANEL VIEWS	Glensound Electronics Ltd. 6 Brooks Place, Maidstone, Kent. ME14 1HE. www.glensound.co.uk Tel: +44 (0) 1622 753662
DATE	28/01/2013		
DRAWN	GGD	DRG. REF. A2-17174	(C) Glensound 2013

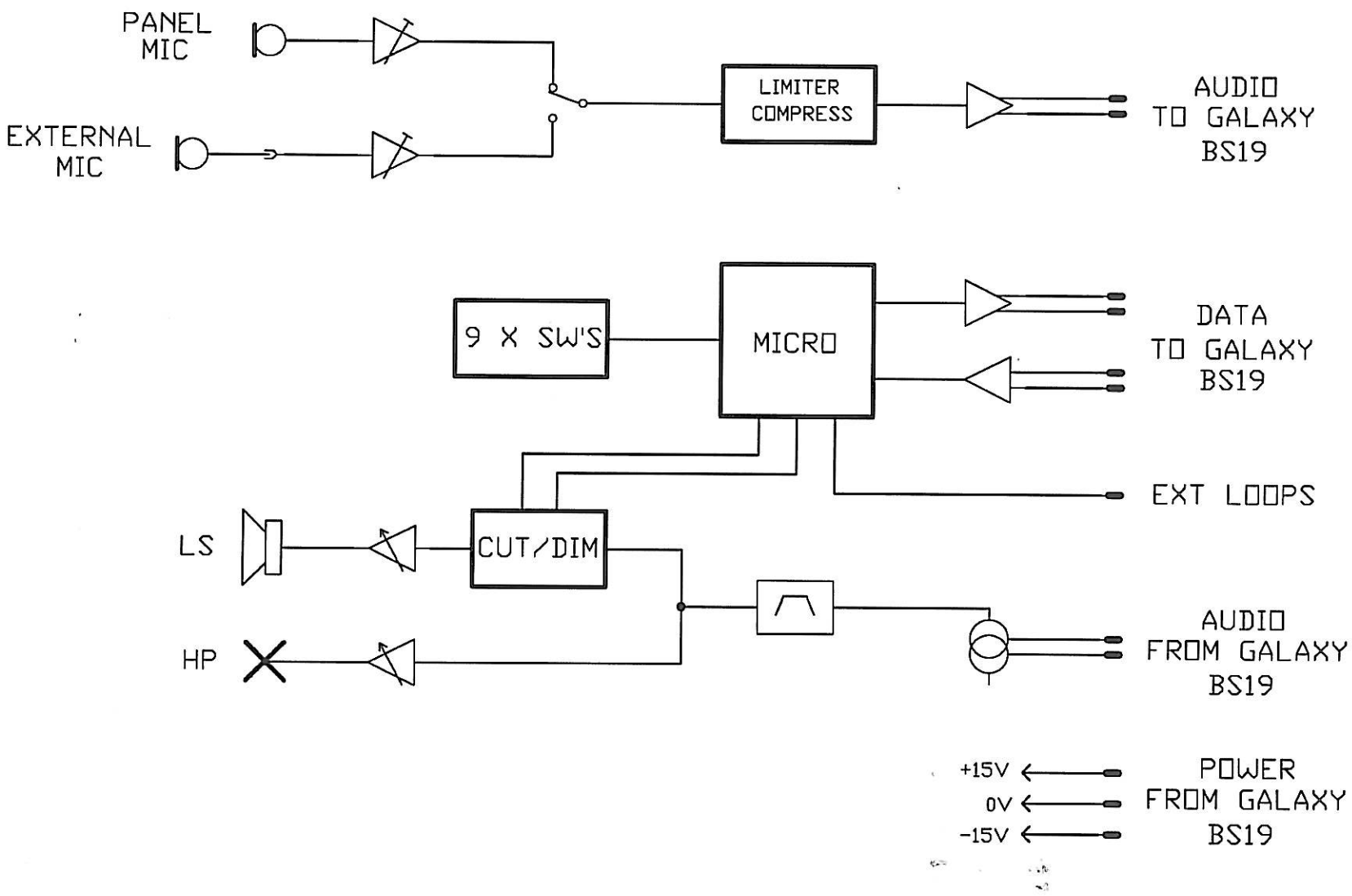

GLENSOUND ELECTRONICS LTD ©2009	GALAXY SDT 1U TALKBACK SUBRACK	ISSUE	DATE	DRAWING NUMBER
		1	13/05/09	A4-16462
				ORIGINALLY DRAWN USING AUTOTRAX

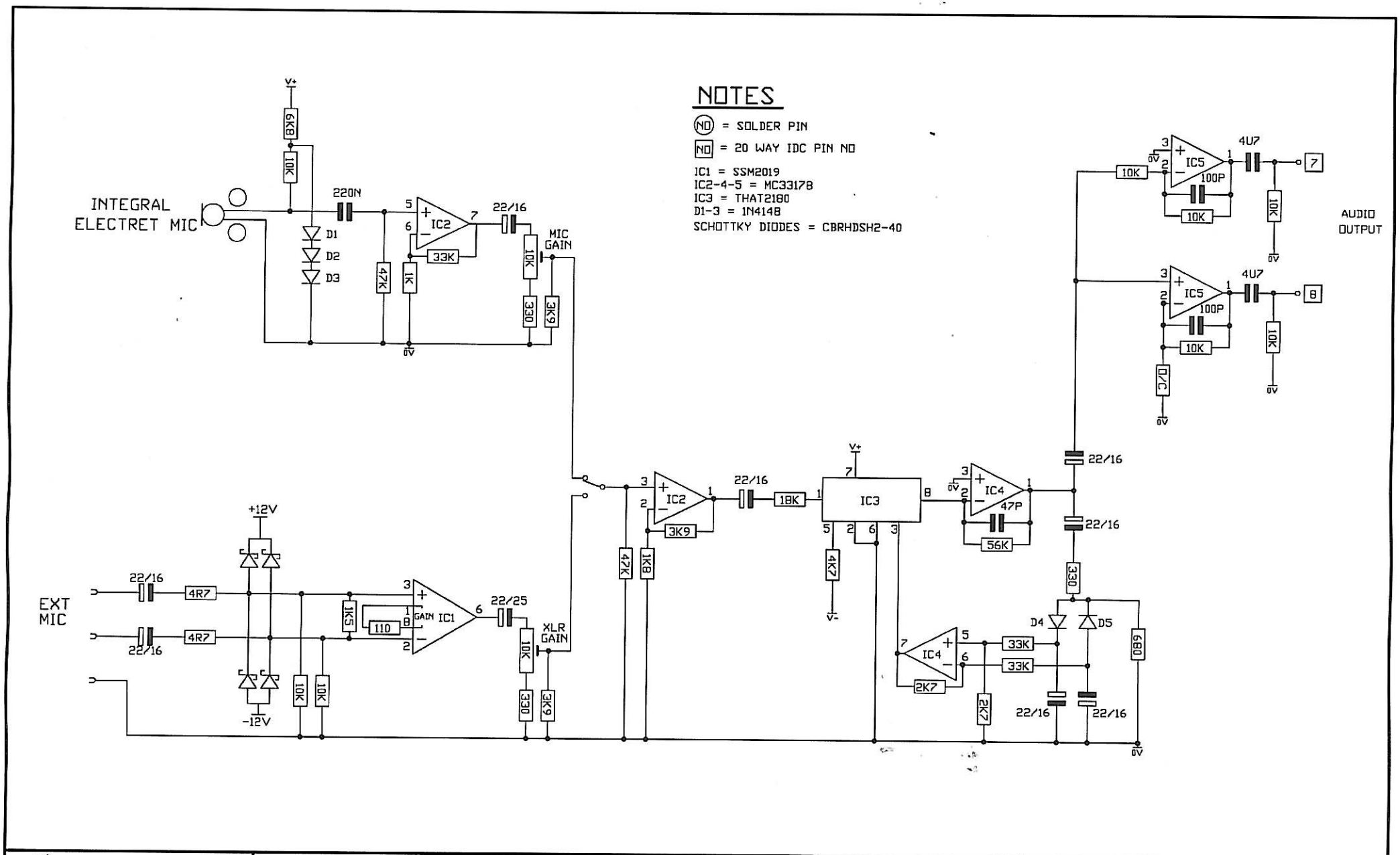

©2009

GLENSOUND ELECTRONICS LTD

GSW17 & GSW18 MIC CIRCUITS

ISSUE	DATE	DRAWING NUMBER
1	12/05/09	A3-16452
		DRAWN BY CJH
		ORIGINALLY DRAWN USING AUTOTRAX

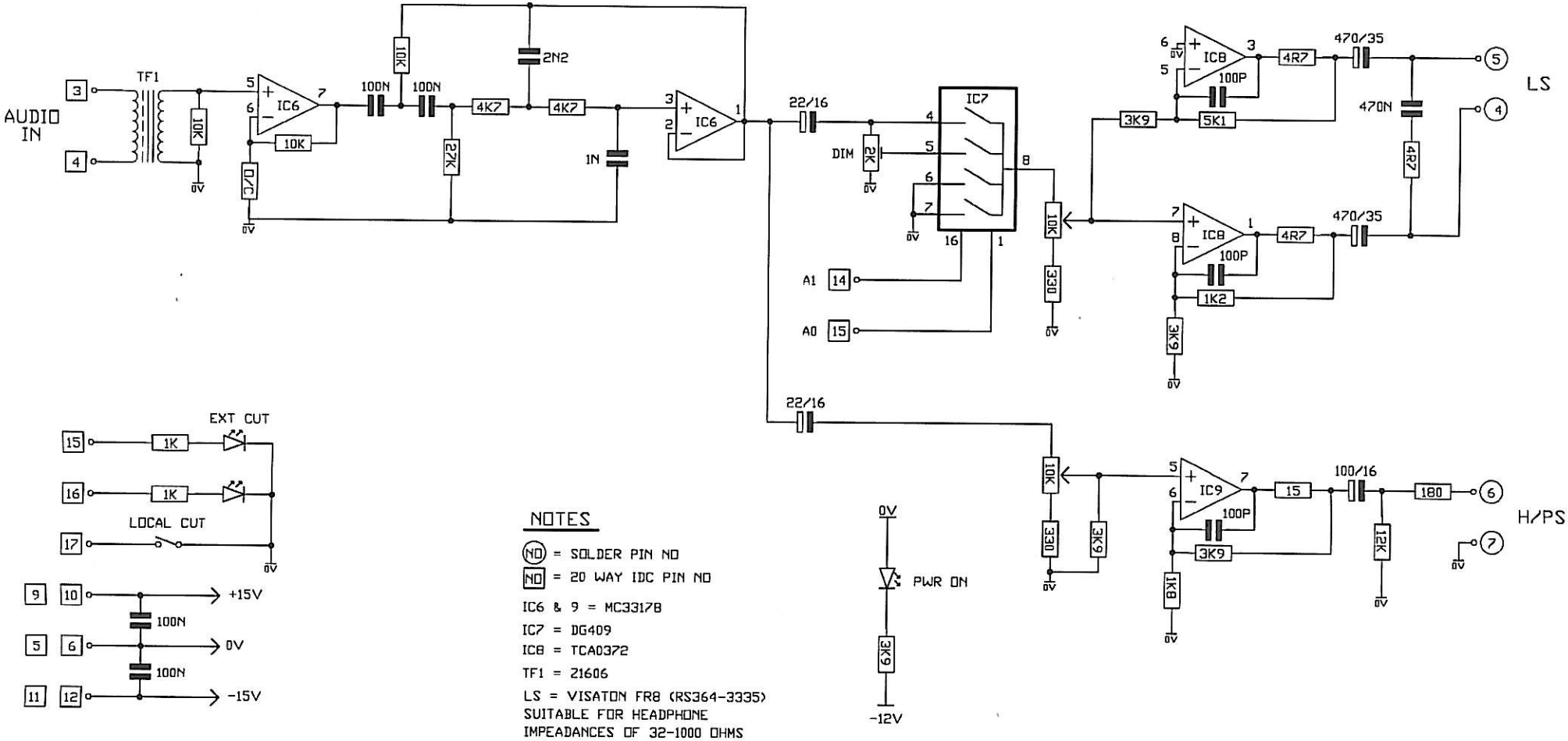

©2009

GLENSOUND ELECTRONICS LTD

GSW18 HEADPHONE & LS
CIRCUIT DIAGRAM

ISSUE	DATE	DRAWING NUMBER
1	12/05/09	A3-16456
		DRAWN BY CJH
		ORIGINALLY DRAWN USING AUTOTRAX

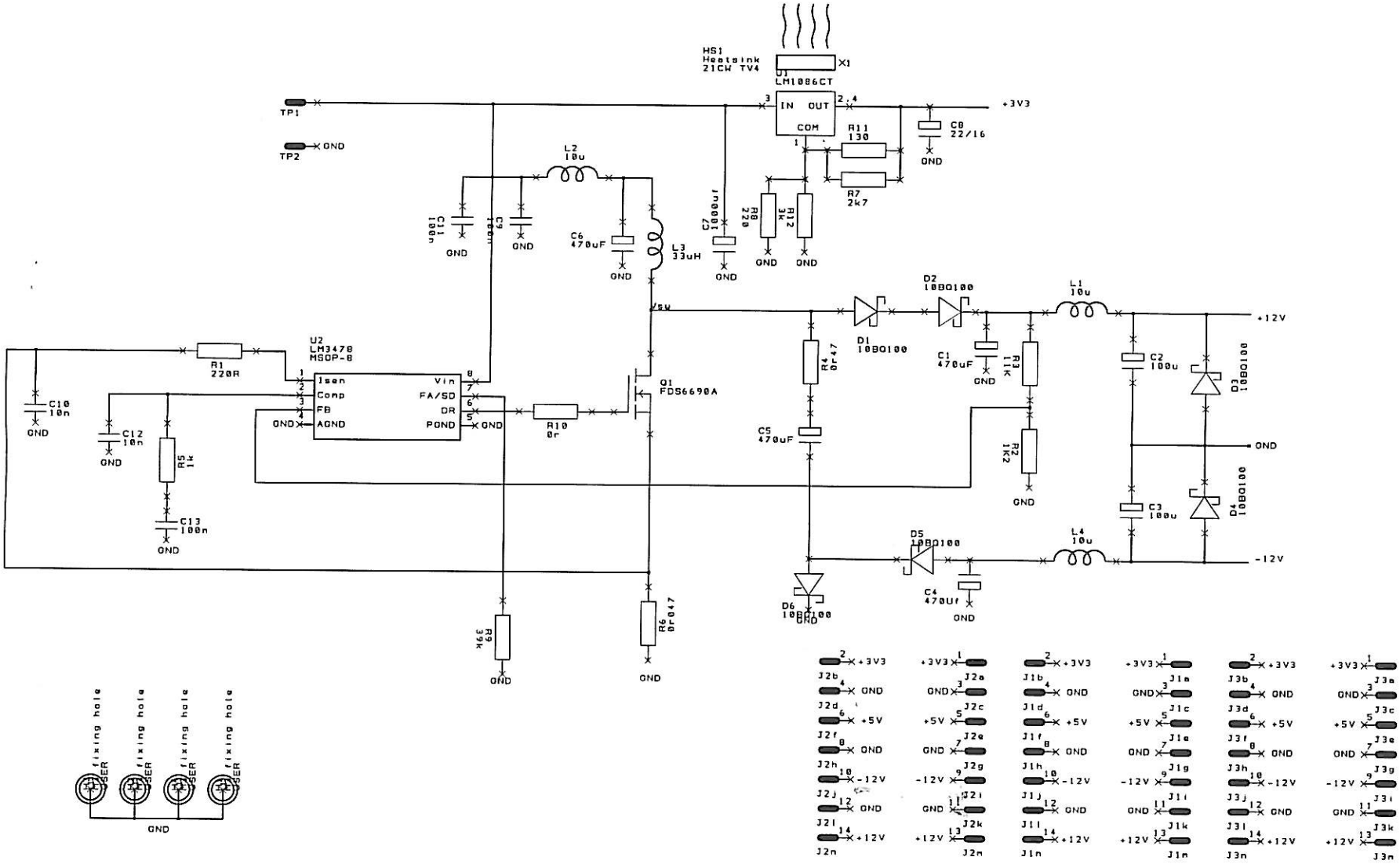

ISSUE	1					(c) GLENSOUND
DATE	11/05/10					SUBJECT GSW96 PSU CIRCUIT DIAGRAM
DRAWN	CJH					DRG. REF. A4-16692

GLENSOUND ELECTRONICS LTD.

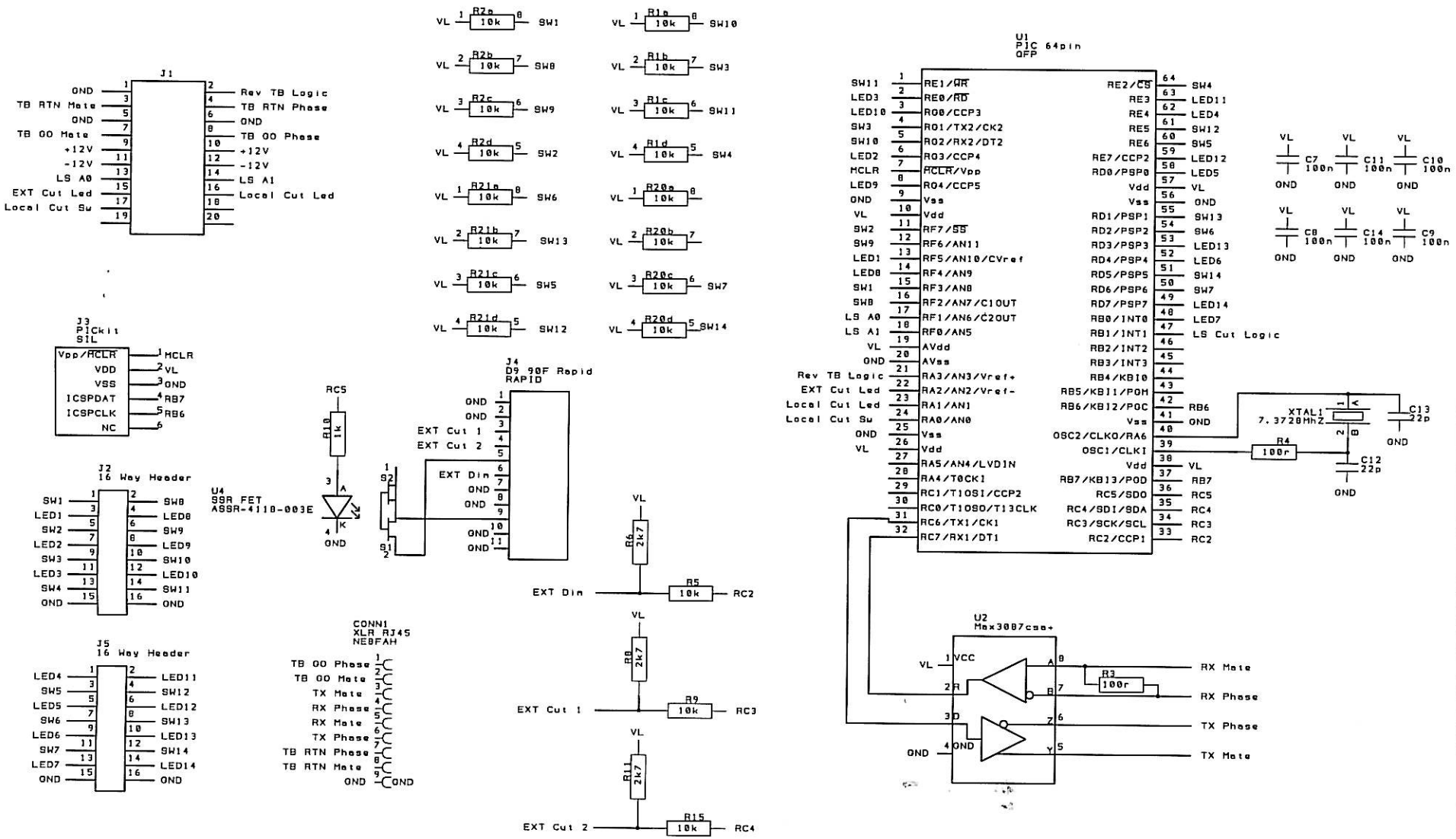

GSY96 GALAXY 114 INTERFACE PCB	ISSUE **1**	DATE **29/01/2013**
	DRAWING NUMBER **A4-17294**	GLENSOUND ELECTRONICS LTD

© 2013

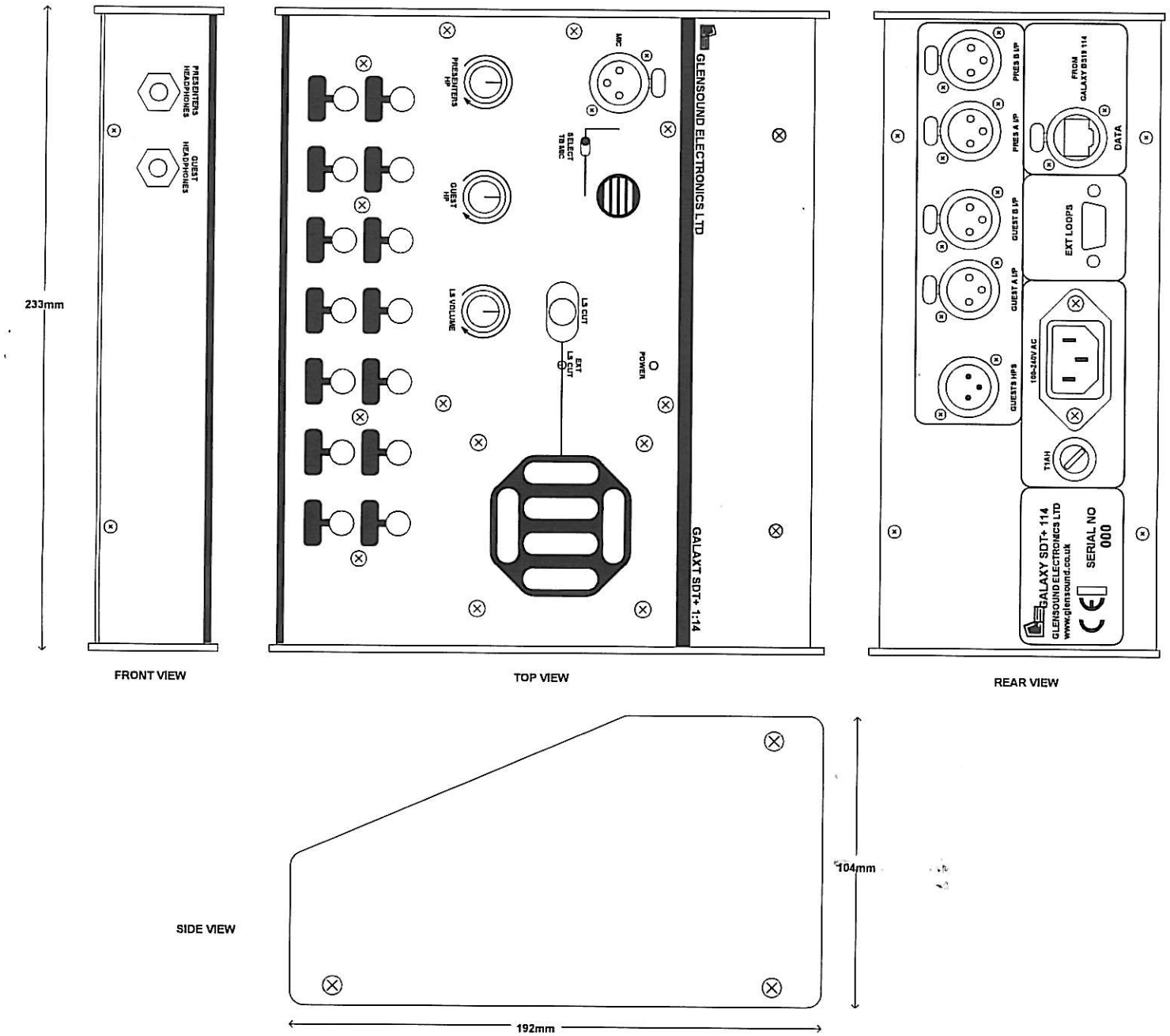

ISSUE	2	SUBJECT GALAXY SDT+1:14 DESKTOP PANEL VIEWS	Glensound Electronics Ltd. 6 Brooks Place, Maidstone, Kent, ME14 1HE. www.glensound.co.uk Tel: +44 (0) 1622 753862
DATE	29/01/2013		
DRAWN	GGD	DRG. REF. A2-17176	(C) Glensound 2013

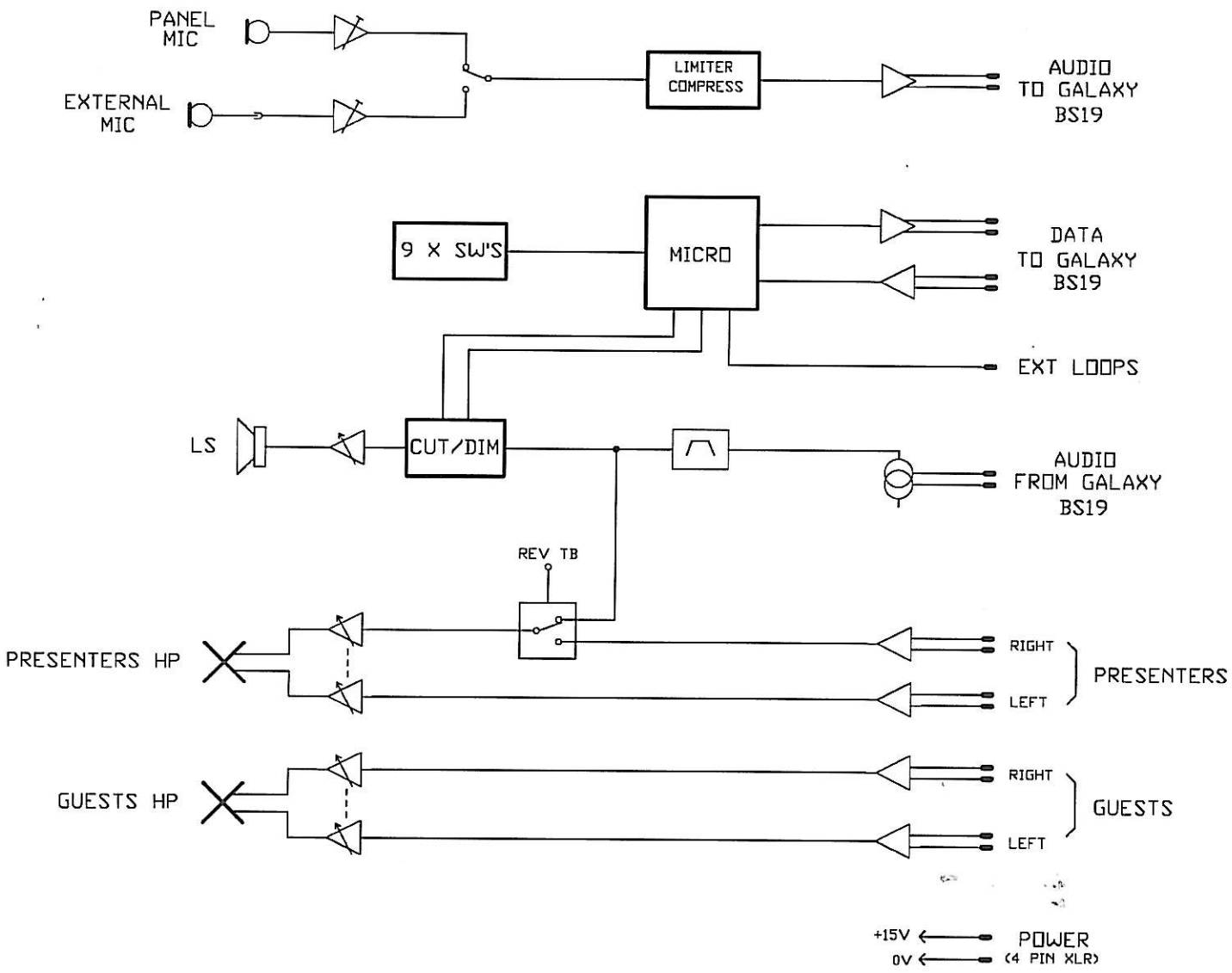

©2009

GLENSOUND ELECTRONICS LTD

GALAXY SDT+ DESKTOP TALKBACK UNIT

ISSUE	DATE	DRAWING NUMBER
1	27/04/09	A3-16434
		DRAWN BY: CJH
		ORIGINALLY DRAWN USING AUTOTRAX

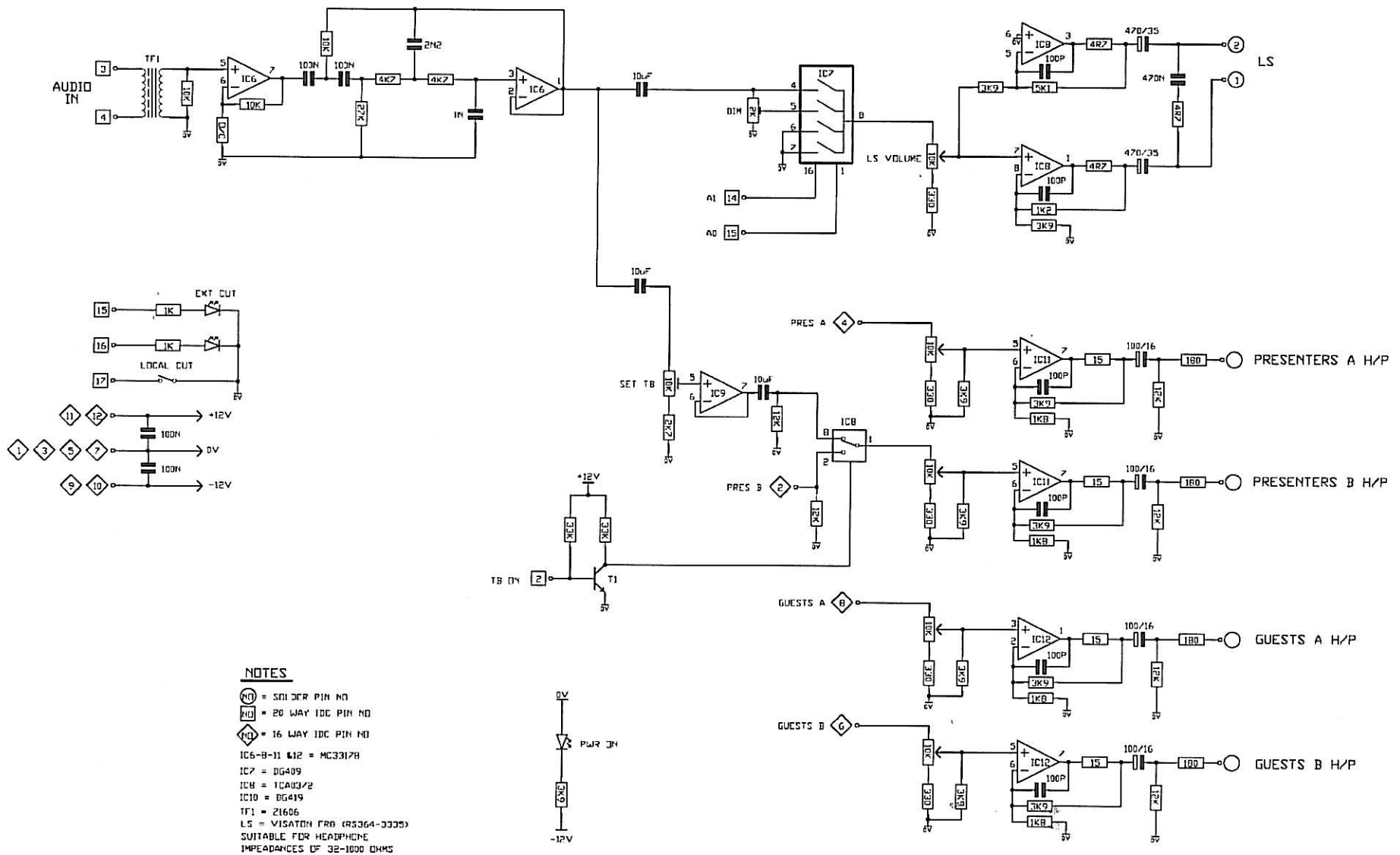

© 2009

GLENSOUND ELECTRONICS LTD

GSW17 HP & LS
CIRCUIT DIAGRAM

ISSUE	DATE	DRAWING NUMBER
1	06/05/09	A2-16454
		DRAWN BY CJH
		DRAWN USING EASYTRAX

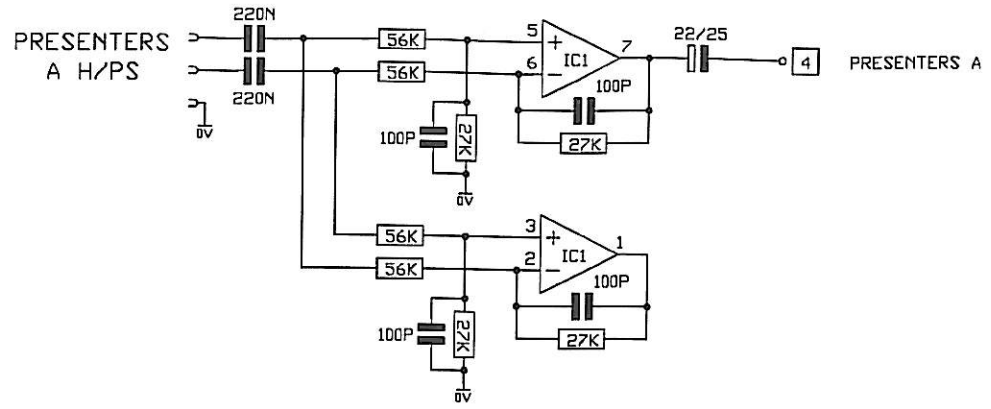

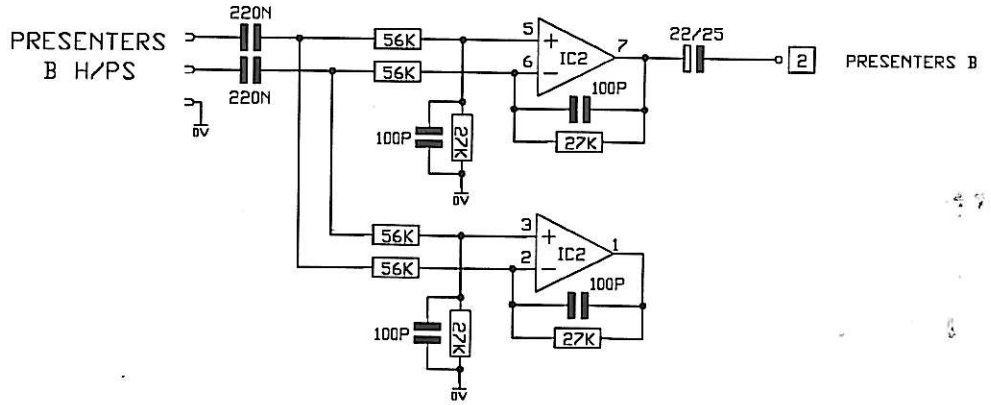

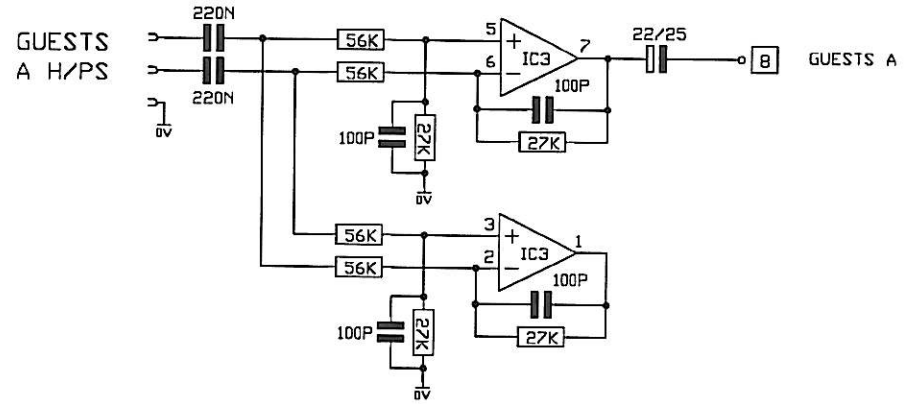

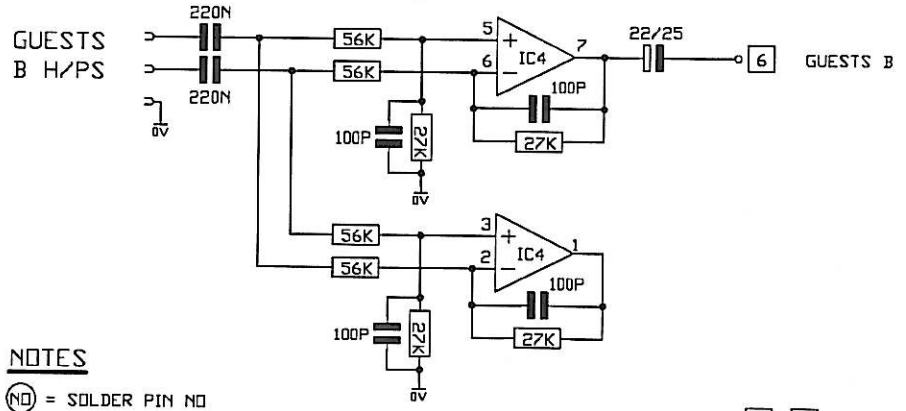

NOTES

(NO) = SOLDER PIN NO

[NO] = 16 WAY IDC PIN NO

IC-4 = MC33178

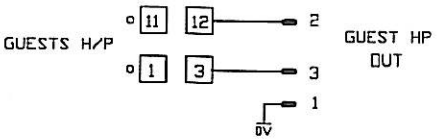

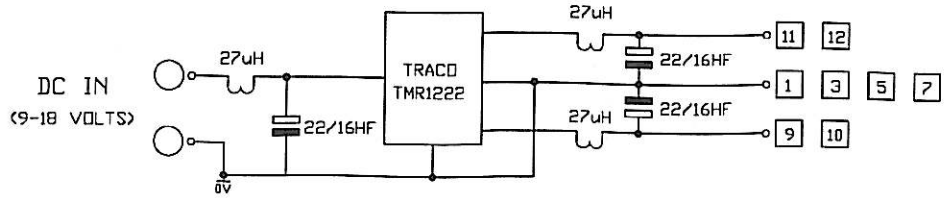

ISSUE	DATE	DRAWING NUMBER	
1	27/04/09	A3-16450	
		DRAWN BY	CJH
		ORIGINALLY DRAWN USING AUTOTRAX	

GSW16 INPUT CIRCUIT DIAGRAM

©2009

GLENSOUND ELECTRONICS LTD

GENERAL PROGRAMMING INFORMATION FOR GALAXY 114

FILE: J:\T3\Galaxy TB\Galaxy 114\Programming Instructions\Galaxy 114 Programming.doc

General

The software allows the option of different sources to be set up to talk to the presenters headphones. All sources can talk to the studio via the loudspeaker built into the mixers bridge, but this loudspeaker is automatically cut when the presenter's mic is live.
Both the loudspeaker in the bridge and the presenters headphones are the same destination and one single button talks to both locations.

Entering Programming Mode

To enter programming mode then the first and last keypad switches on the bridge should be depressed for a few seconds.
Once in programming mode the channels that are allowed access to the presenter's headphone circuit will flash.

Changing Allowed Sources

When in programming mode any button that is flashing on the bridge key panel indicates that its related source has permission to talk to the presenters headphones. To add or remove sources then their associated buttons should be pressed and the source will toggle between flashing (allowed) and off (not allowed).

Leaving Programming Mode

To leave the programming mode then the first and last keypad switches on the bridge should be depressed for a few seconds.

ALL D CONNECTORS ARE VIEWED FROM NON WIRING SIDE

	S114+ EXTERNAL INPUTS
D25 FIXED SOCKET PIN 1 PIN 14 PIN 2 PIN 15 PIN 3 PIN 16 PIN 4 PIN 17 PIN 5 PIN 18 PIN 6 PIN 19 PIN 7 PIN 20 PIN 8 PIN 21 PIN 9 PIN 22 PIN 10 PIN 23 PIN 11 PIN 24 PIN 12 PIN 25 PIN 13	0V Input 1A Phase Input 1A Mate 0V Input 1B Pahse Input 1B Mate 0V Input 2A Phase Input 2A Mate 0V Input 2B Phase Input 2B Mate 0V Input 3A Phase Input 3A Mate 0V Input 3B Phase Input 3B Mate 0V Input 4A Phase Input 4A Mate 0V Input 4B Phase Input 4B Mate 0V

	EXT LOOPS
D9 FIXED PLUG PIN 1 PIN 6 PIN 2 PIN 7 PIN 3 PIN 8 PIN 4 PIN 9 PIN 5	0V EXTERNAL DIM (HELD HIGH) EXT DIM (0V) COUGH SWITCH EXTERNAL CUT (HELD HIGH) EXTERNAL CUT (0V) N/C TB KEY PRESS OPTO COLLECTOR TB KEY PRESS OPTO EMITTER

STANDARD PAIRS

PAIR 1 = PINS 4 - 5
PAIR 2 = PINS 3 - 6
PAIR 3 = PINS 1 - 2
PAIR 4 = PINS 7 - 8

PCB MOUNTING
COMPONENT SIDE VIEW

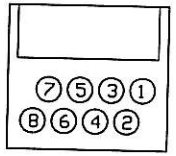

PINS	DATA & AUDIO LINK
1	TB GO Phase
2	TB GO Mate
3	TX Mate
4	RX Phase
5	RX Mate
6	TX Phase
7	TB RTN Phase
8	TB RTN Mate

ISSUE	1	(C) Glensound 2012	
DATE	29/01/2013	SUBJECT	GALAXY 114 WIRING INFO
DRAWN	GGD	DRG. REF.	A3-17296

A3H

Glensound Electronics Ltd.
6 Brooks Place, Maidstone, Kent. ME14 1HE.
www.glensound.co.uk Tel: +44 (0) 1622 753662